TABLE OF CONTENTS


0.1 Circulation List

0.2 Amendment Record

FOREWORD

1. SCOPE
2. REFERENCES
3. TERMS AND DEFINITIONS
4. REQUIREMENTS
5. TESTS AND INSPECTION
6. PACKING, MARKING AND INSTRUCTIONS

ANNEX A: **Guaranteed Technical Particulars** *(to be filled and signed by the Supplier and submitted together with copies of manufacturer's catalogues, brochures, drawings, technical data, sales records, customer reference letters and copies of certificates/test reports for tender evaluation)*

## 0.1 Circulation List

| COPY NO. | COPY HOLDER |
|---|---|
| 1 | Research & Development Manager |
| 2 | Procurement Manager |
| 3 | Chief Manager, Distribution |
| Electronic copy (pdf) on Kenya Power server (currently: Network→stima-fprnt-001→techstd&specs) | |

## 0.2 Amendment Record

| Rev No. | Date (YYYY-MM-DD) | Description of Change | Prepared by (Name & Signature) | Approved by (Name & Signature) |
|---|---|---|---|---|
| 4 | 2013/10/30 | Dimensions of fig 1,TSP/ 02/004/01 amended | G.K. GATHIGE | |
| | | | | |
| | | | | |
| | | | | |

## FOREWORD

This specification has been prepared by the Research and Development, Distribution and Projects Departments all of Kenya Power (KP). It lays down requirements for overhead line multipurpose pole clamps for use in both concrete and wooden poles in Kenya Power distribution network. It is intended for use by KP in purchasing the equipment.

## 1. SCOPE

1.1 This specification is for multipurpose pole clamps to be used in supporting line accessories in low voltage(LV),11KV,33KV and 66KV 50Hz overhead power Lines using bare conductors from 50mm²AA to 100mm²AA, 75mm² to 300mm² ASCR/AAAC and from 50mm² to 95mm² Aerial Bundled Cables/Conductors (ABC).The lines are constructed on wooden and pre-stressed/reinforced round concrete poles.

1.2

The specification also covers inspection and test of the accessories as well as schedule of Guaranteed Technical Particulars to be filled, signed by the supplier and submitted for tender evaluation.

The specification stipulates the minimum requirements for multipurpose pole clamp accessories acceptable for use in the company and it shall be the responsibility of the manufacturer to ensure adequacy of the design, good workmanship and good engineering practice in the manufacture of the multipurpose pole clamps for KPLC.

The specification does not purport to include all the necessary provisions of a contract.

## 2. REFERENCES

The following standards contain provisions which, through reference in this text constitute provisions of this specification. Unless otherwise stated, the latest editions (including amendments) apply.

ISO 1461: specification for hot dip galvanized coatings on fabricated iron and steel articles. Specifications and test methods.

BS 4360: Specification for weldable structural steels

BS EN 1011-1&2: Specification for welding of metallic materials

ESI43.95: Steel works overhead lines

## 3. TERMS AND DEFINITIONS

The terms and definitions given in the reference standards shall apply.

## 4. REQUIREMENTS

### 4.1 SERVICE CONDITIONS

The accessories shall be suitable for continuous operation outdoors in tropical areas at altitudes of up to 2200m above sea level, humidity of up to 95%, average ambient temperature of +30°C with a minimum of -1°C and a maximum of +40°C, in direct sunlight, heavy saline conditions along the coast and isokeraunic levels of up to 180 thunderstorm days per year.

### 4.2 MATERIALS

4.2.1 The multipurpose pole clamp shall be fabricated from structural steel grade Q235 as specified in the BS 4360: "Specification for wieldable structural steel" and shall be hot dipped to ISO 1461

4.2.2 The tensile strength of the multipurpose pole clamp shall be not less than 70KN for the light duty clamps and 120KN for the heavy duty clamps respectively. The testing and

verification of this tensile strength shall be carried out with a pole in place as shown in fig 4

Note: **Documentary evidence for the material composition to be used shall be submitted with the tender for evaluation**

## 4.3 CONSTRUCTION

4.3.1 The multipurpose pole clamps shall be designed to adapt to circular concrete poles tapering diameters at 13mm per metre and wooden poles for attaching line accessories at various configurations.

4.3.2 The multipurpose pole clamps shall be designed with forged reinforcing stiffer (ribs) on their corners for extra strength

4.3.3 The cutting shall be by cold process (cutting and punching) while bending and shaping shall be by hot forging. In case of cold bending, the materials after bending should be stress relieved at minimum temperature of $600^{O}$ C and it should be capable of being re-flattened without fracture.

**Note: documentary evidence to this to be provided with tender**

4.3.4 All surfaces of the multipurpose pole clamps shall be smooth, free from blisters, sharp edges or any other irregularities which can injure personnel during assembly or installation

## 4.4 DIMENSIONS

4.4.1 The multipurpose pole clamps shall conform to dimensional and performance requirements of this specification.

4.4.2 The multipurpose pole clamps shall be specified on the basis of the dimensions specified in table 1 and 2 below and the drawings in fig 1(TSP/01) to fig 3(TSP/03) attached in the specification.

4.4.3 All drawings for the multipurpose pole clamps are conceptual. The manufacturer shall be responsible for preparation of drawings and design which meets the dimensional, strength and other performance requirements of this specifications

4.4.4 The multipurpose pole clamps shall be supplied complete with bolts of the size specified. All bolts for main line to be provided with 2 no Nuts, one of which bolt shall be a locking nut, 1 No Flat washer and 1 No spring washer. The Bolts for Rib to be complete with 1 No Nut, 1 No flat and 1 no spring washer

4.4.5 All the line bolts shall be M20 x 3½" full threaded while the rib bolts shall be M16 x 3" full threaded unless specified. All shall be as shown in fig 1

**Table 1:** Light duty multipurpose pole clamps dimensions

| Range(mm) | Dimensions | | | |
|---|---|---|---|---|
| | **A(mm)** | **B(mm)** | **Width(mm)** | **Gauge(mm)** |
| 178-203 | 203 | 178 | 50 | 6 |
| 203-229 | 229 | 203 | 50 | 6 |
| 229-254 | 254 | 229 | 50 | 6 |
| 254-279 | 279 | 254 | 50 | 6 |

The light duty multipurpose clamps are for use in 33KV, 11KV and LV constructions

**Table 2:** Heavy duty multipurpose pole clamps dimensions

| Range(mm) | Dimensions | | | |
|---|---|---|---|---|
| | **A(mm)** | **B(mm)** | **Width(mm)** | **Gauge(mm)** |
| 178-203 | 203 | 178 | 64 | 8 |
| 203-229 | 229 | 203 | 64 | 8 |
| 229-254 | 254 | 229 | 64 | 8 |
| 254-279 | 279 | 254 | 64 | 8 |

The heavy duty multipurpose clamps are for use in 66KV and above constructions

4.4.6 The dimensional tolerances for the holes and thicknesses shall be ±5%

4.4.7 All holes shall be drilled in one operation and burrs shall be removed. Holes shall not be formed by a gas cutting process. All matching holes for bolts shall register with each other so that a gauge 2mm less in diameter than the diameter of the bolt shall

pass freely through the assembled members in a direction at right angle to such members.

4.4.8 All components shall be thoroughly galvanized by hot dip method after fabrication and shall comply with the requirement of ISO 1461 with a minimum zinc coating thickness of 80µm

## 5. TESTS AND INSPECTION

5.1 The accessories shall be inspected and tested in accordance with the requirements of this specification as per clause 4.2.2 and the declared standard of manufacture. It shall be the responsibility of the manufacturer/supplier to perform or to have performed the tests specified and whatever other tests normally performed at works.

5.2 Copies of previous test certificates and test reports (for each type of accessory) by the relevant International or National Testing/Standards Authority of the country of manufacture (or ISO/IEC 17025 accredited independent laboratory) shall be submitted with the offer for evaluation. A copy of accreditation certificate for the laboratory shall also be submitted (all in English Language).

5.3 Routine and sample test reports for the accessories to be supplied shall be submitted to KPLC for approval before shipment/delivery of the goods. KPLC Engineers (2) will witness these tests at the factory before shipment.

5.4 During delivery of the accessories, KPLC will inspect them and may perform or have performed any of the relevant tests in order to verify compliance with the specification. The supplier shall replace/rectify without charge to KPLC, accessories which upon examination, test or use fail to meet any or all of the requirements in the specification.

5.5 The manufacturer shall have at least **seven** years' experience in the manufacture of the offered accessories and shall have exported similar accessories to at least **five**

utilities outside the country of origin. Documentary evidence including customer reference letters, detailed list & contact addresses of previous major customers in the past five years shall be submitted with the tender.

### 5.6 QUALITY MANAGEMENT SYSTEM

The supplier shall include a quality assurance plan (QAP) that will be used to ensure that the multipurpose clamp design, material, workmanship, tests, service capability, maintenance and documentation, will fulfill the requirements stated in the standards, specifications and regulations. The QAP shall be based on and include relevant parts to fulfill the requirements of ISO 9001:2008.

The Manufacturer's Declaration of Conformity to reference standards and copies of quality management certifications including copy of valid ISO 9001: 2008 certificate shall be submitted with the tender for evaluation.

## 6.0 TECHNICAL DOCUMENTATION

6.1 Design and fabrication drawings including material details of the items to be supplied shall be submitted to KPLC for approval before manufacture.

6.2 Tenders with substantial deviation but offering superior materials shall be accompanied by detailed descriptive manuals, drawings and certified test reports for the purpose of technical evaluation.

6.3 List of workshop tools and equipment shall also be submitted for reference.

### 6.4 PACKING, MARKING AND INSTRUCTIONS

6.4.1 Each item shall be packed in such a manner as to protect it from damage during transportation, handling and storage.

6.4.2 Each package shall contain relevant instructions for handling and use printed in the English Language.

6.4.3 Each item shall be engraved legibly and indelibly with the following information:

(i) Manufacture's Name

(ii) Month and Year of Manufacture

(iii) Type Reference Number (TSP/01, TSP02, TSP03)

(iv)Mechanical Characteristics (as applicable)

(v)Size (diameter range)

(vi)Standards to which the item complies

(vii) Duty of the item (LDC: Light duty clamp & HDC: Heavy duty clamp)

*Note: The characters used in marking shall be at least 3mm high.*

**ANNEX A:**

**Guaranteed Technical Particulars and Statement of Compliance** *(to be filled and signed by the Manufacturer for all clauses and submitted together with catalogues, brochures, drawings, and technical data and test reports for tender evaluation)*

| Description | | Bidder's offer |
|---|---|---|
| 1. Manufacturer's Name & Country of manufacture | | |
| 2. Type Reference/Model Number of items offered (as per clause 6.4.(iii) ) | | |
| 3. List of components to be supplied (for one installation) | | |
| Clause | Description | Bidders offer |
| 4.1 | Service conditions | |
| 4.2.1 | Structural grade of steel | |
| 4.2.2 | Tensile strength of light and heavy duty multipurpose clamps | |
| 4.3.1 | Adaptation of clamps to both wooden and concrete poles | |
| 4.3.3 | Type of cutting and forging | |
| 4.3.4 | Bending and shaping | |
| 4.3.5 | Finished product(appearance) | |
| 4.4.1 | compliance to dimensional and performance requirements | |
| 4.4.4 | Multipurpose clamps locking bolts sizes | |
| 4.4.5 | Size of line Bolts and rib bolts | |
| 4.4.6 | Dimensions of holes | |
| 4.4.7 | Thickness of galvanization and compliance to ISO1461 | |
| 5.2 | Test types and standards and copies of routine test reports | |
| 5.3 | Accreditation certificate as per standard ISO/IEC 17025 | |
| 5.4 | Access by authorized Kplc Engineers for factory inspection and FAT | |
| 5.5 | Experience in manufacture of multipurpose clamps | |
| 5.6 | QAPand ISO 9001:2008 | |

| | | |
|---|---|---|
| 6.1 | Design and fabrication drawings to KPLC for approval before manufacturing | |
| 6.4.1 | List and contacts of previous customers and workshop tools and equipment | |
| 6.4.3 | Labeling and Marking by engraving as per specification | |

.....

**Manufacturer's Name, Signature, Stamp and Date**

**.....THIS SPACE LEFT BLANK.....**

## Drawings

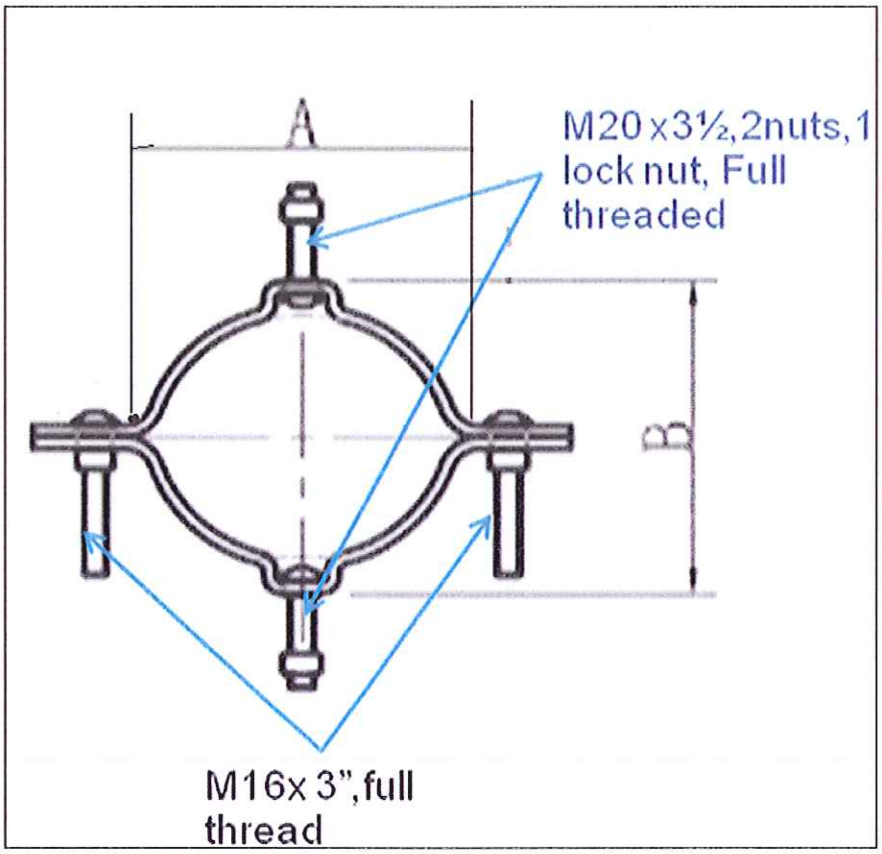


Fig 1: TSP/02/004/01: Horizontal section clamp.

**(Size and quantity to be specified in tender)**
This clamp will be used in horizontal section and double cross arms
**Applicable codes: 186438,186447,186448,186449**

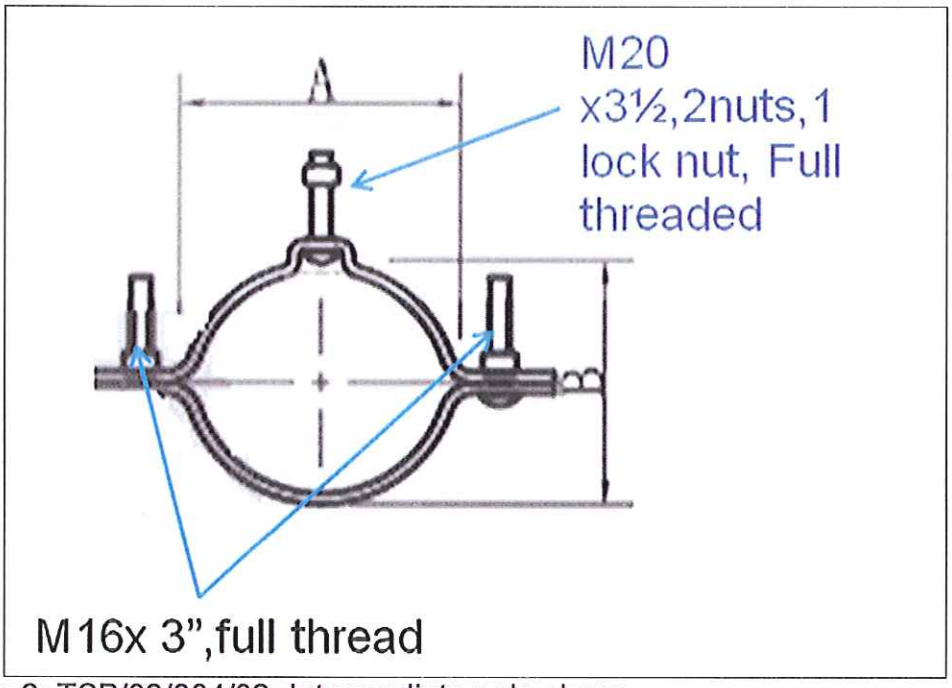


Fig 2: TSP/02/004/02. Intermediate pole clamp

**(Size and quantity to be specified in tender)**

This clamp is for use in intermediate pole, pilot insulators and Low voltage work

**Applicable codes: 186431,186432,186433,186434,186439,186442**

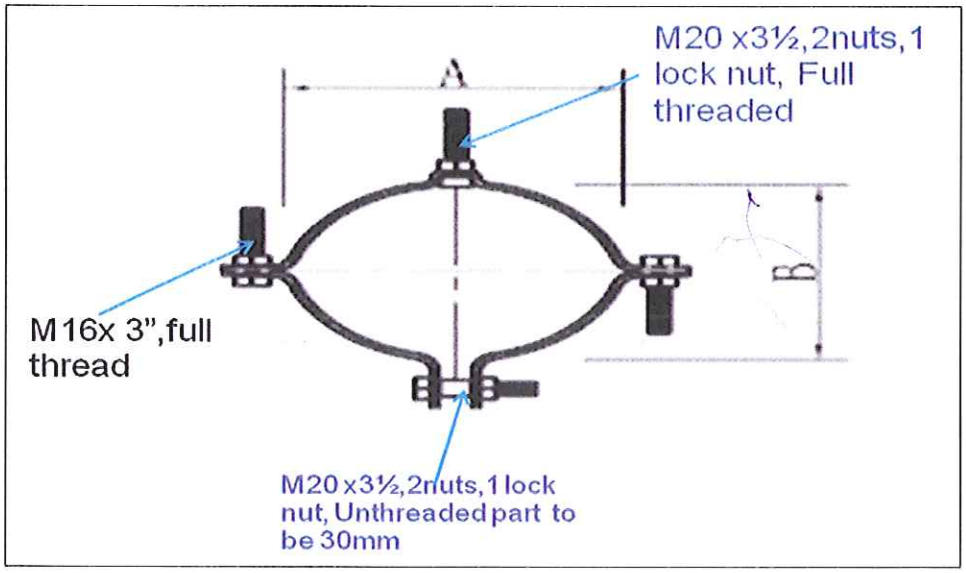


Fig 3: TSP/02/004/03: Section/stay clamp
**(Size and quantity to be specified in tender)**

This clamp will be used in Vertical sections, VFA, Terminals and stay work

**Applicable codes:**
**186435,186436,186437,186443,186444,186445,186446,186455**

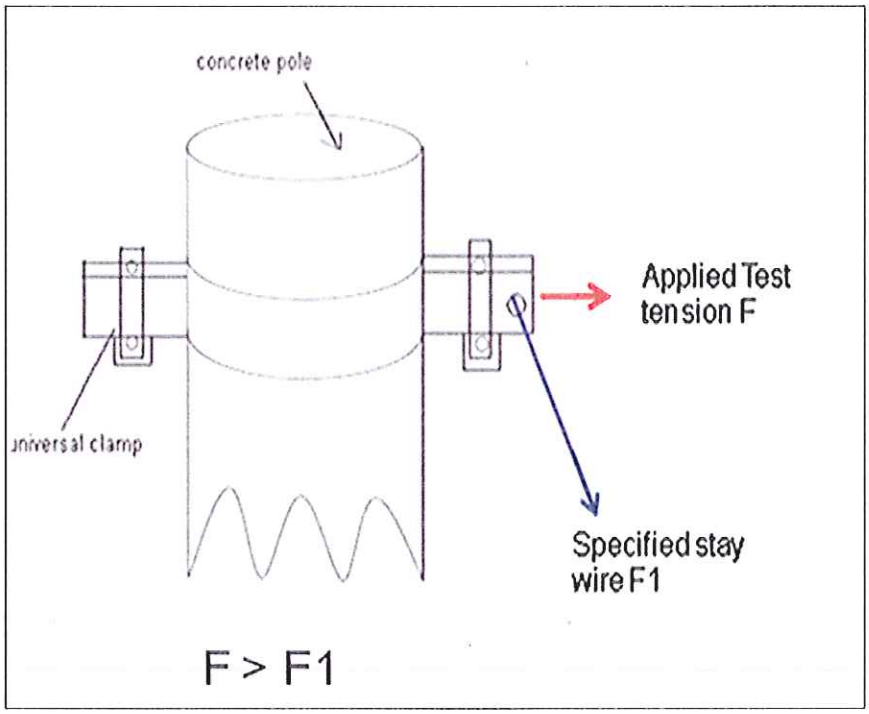


Fig4: Testing of multipurpose clamp